instructions

Kit 1150

HONDA HR-V, 3-dr SUV, 99-01, 02-05*
HONDA HR-V, 5-dr SUV, 00-01, 02-05*

* With normal roof

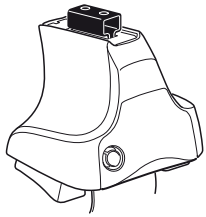

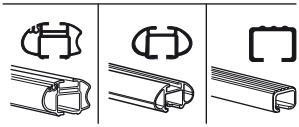

480R
754

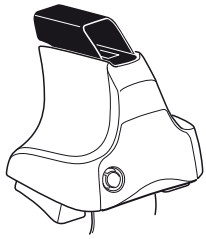

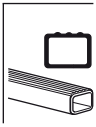

480

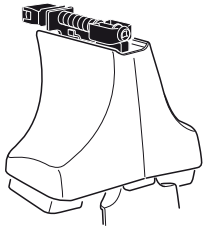

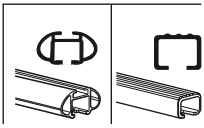

750

ISO 11154-E

THULE® SWEDEN

c.20090914.503-1150

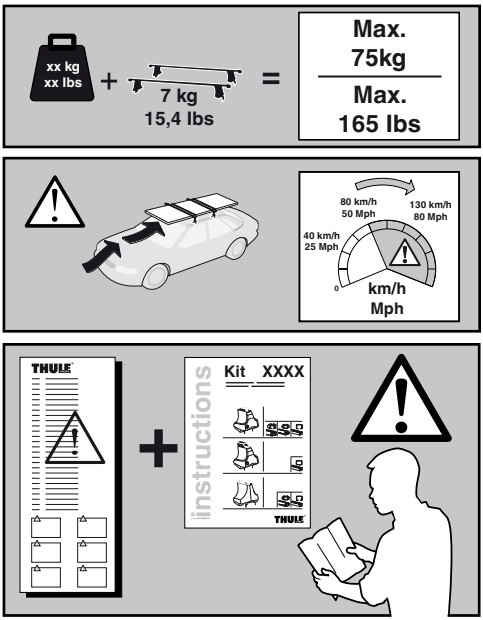
xx kg
xx lbs
+
7 kg
15,4 lbs
=
Max.
75kg
Max.
165 lbs
80 km/h
50 Mph
130 km/h
80 Mph
40 km/h
25 Mph
0
km/h
Mph
THULE
+
instructions
Kit XXXX
THULE

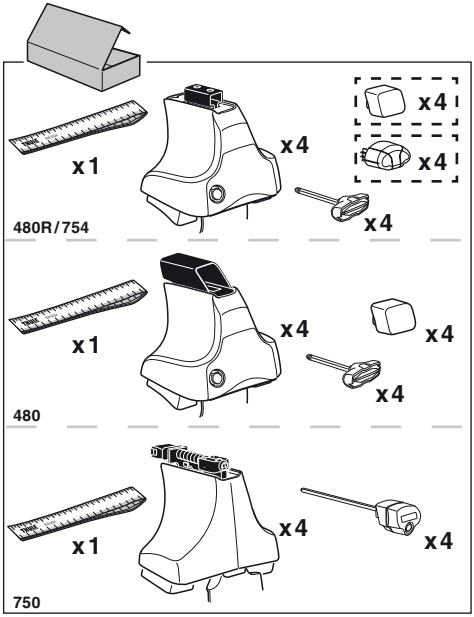
x1
x4
x4
x4
x4
480R/754
x1
x4
x4
x4
480
x1
x4
x4
750

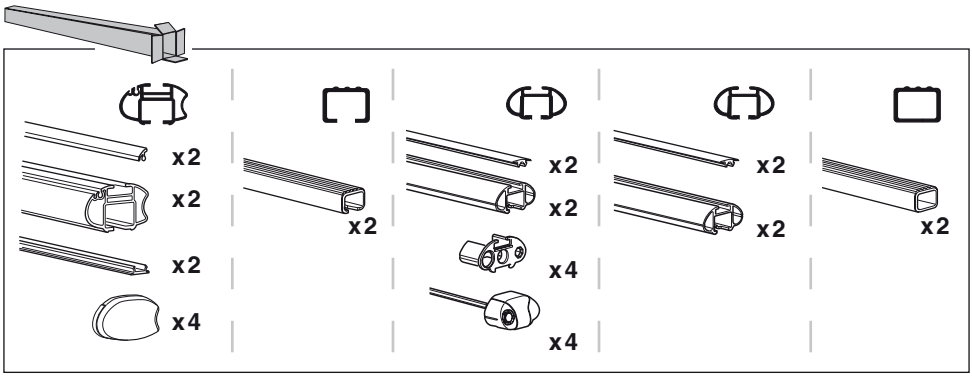
x2
x2
x2
x4
x2
x2
x4
x4
x2
x2
x2

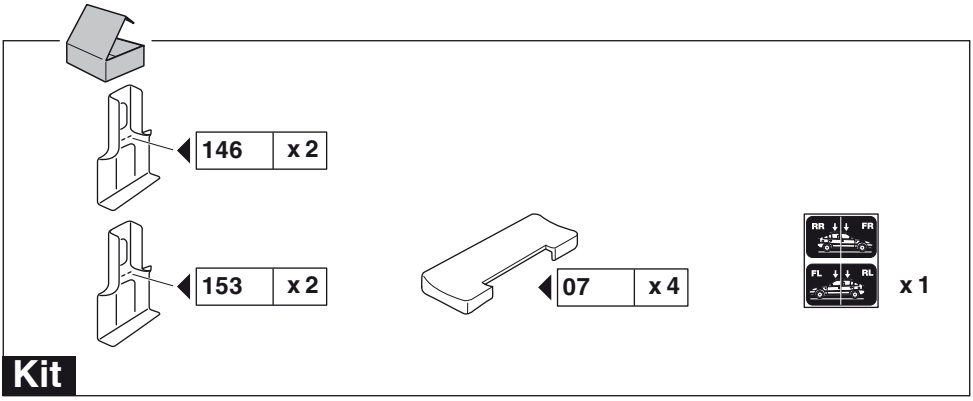
146
x2
153
x2
07
x4
RR
FR
FL
RL
x1
Kit

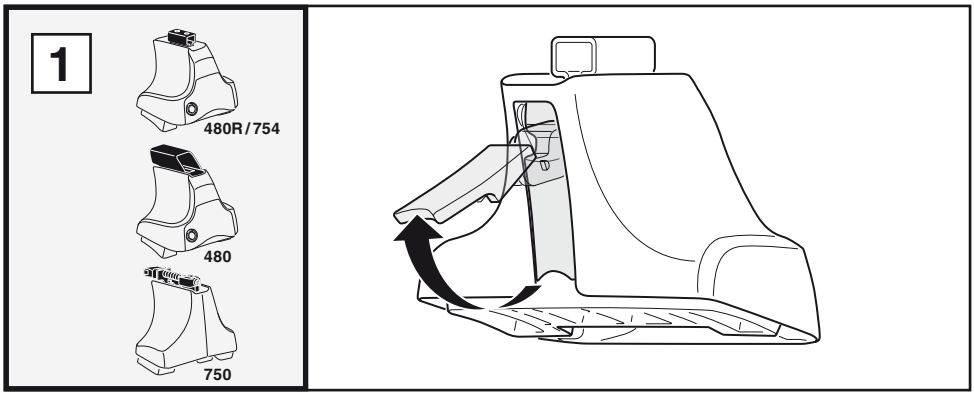
1
480R / 754
480
750

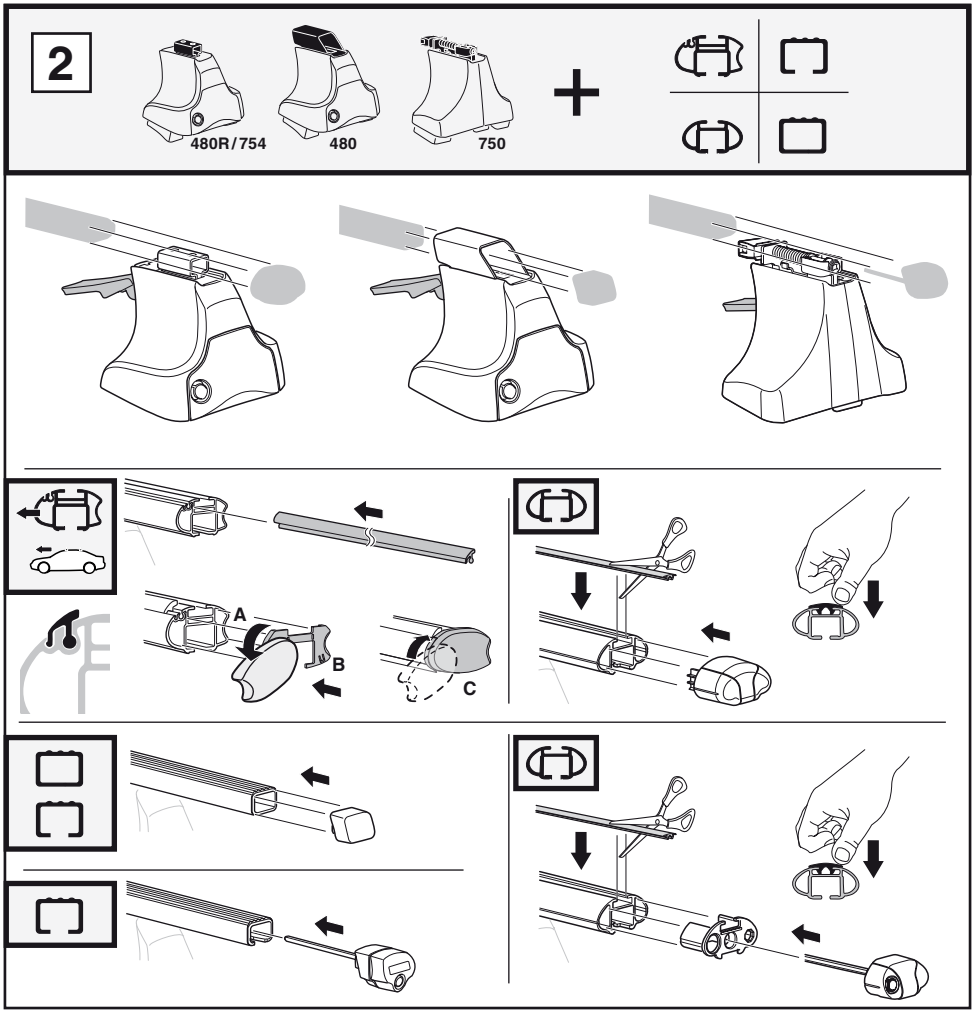
2
480R / 754
480
750
A
B
C

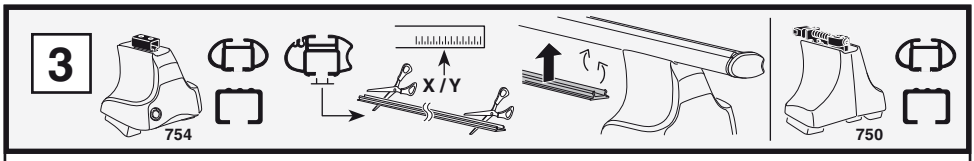

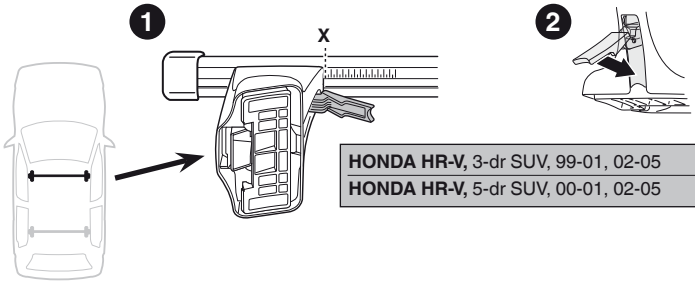

	X
HONDA HR-V, 3-dr SUV, 99-01, 02-05	**46,5**
HONDA HR-V, 5-dr SUV, 00-01, 02-05	**45,5**

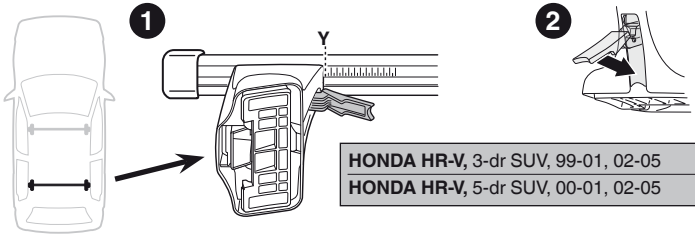

	Y
HONDA HR-V, 3-dr SUV, 99-01, 02-05	**44**
HONDA HR-V, 5-dr SUV, 00-01, 02-05	**43,5**

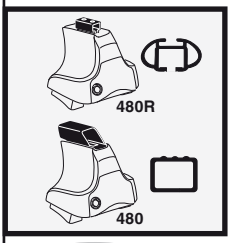

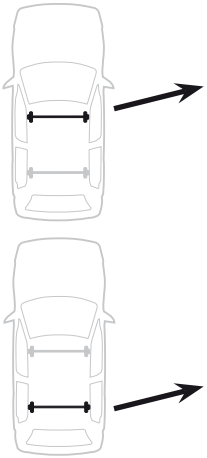

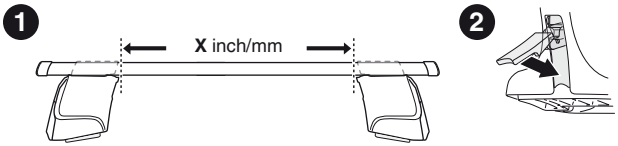

	X inch	X mm
HONDA HR-V, 3-dr SUV, 99-01, 02-05	**43 7/8 ”**	**1116** mm
HONDA HR-V, 5-dr SUV, 00-01, 02-05	**43 1/2 ”**	**1106** mm

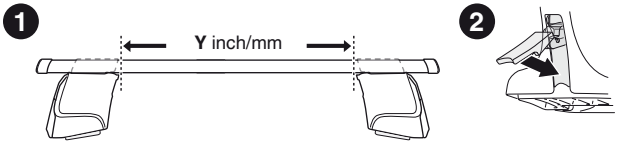

	Y inch	Y mm
HONDA HR-V, 3-dr SUV, 99-01, 02-05	**43 ”**	**1091** mm
HONDA HR-V, 5-dr SUV, 00-01, 02-05	**42 3/4 ”**	**1086** mm

4

HONDA HR-V, 3-dr SUV, 99-01, 02-05
HONDA HR-V, 5-dr SUV, 00-01, 02-05

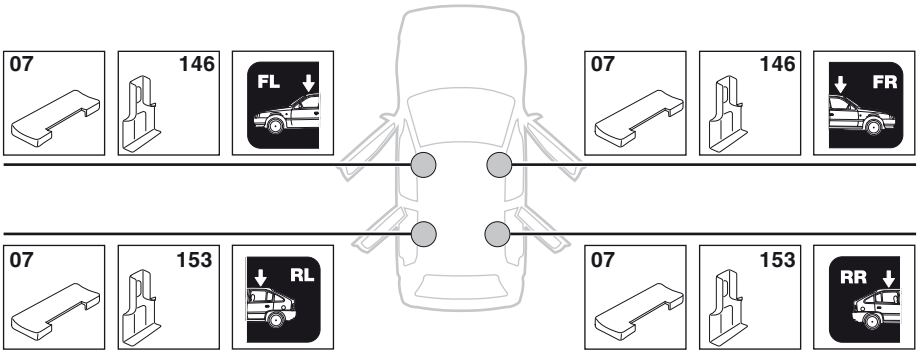

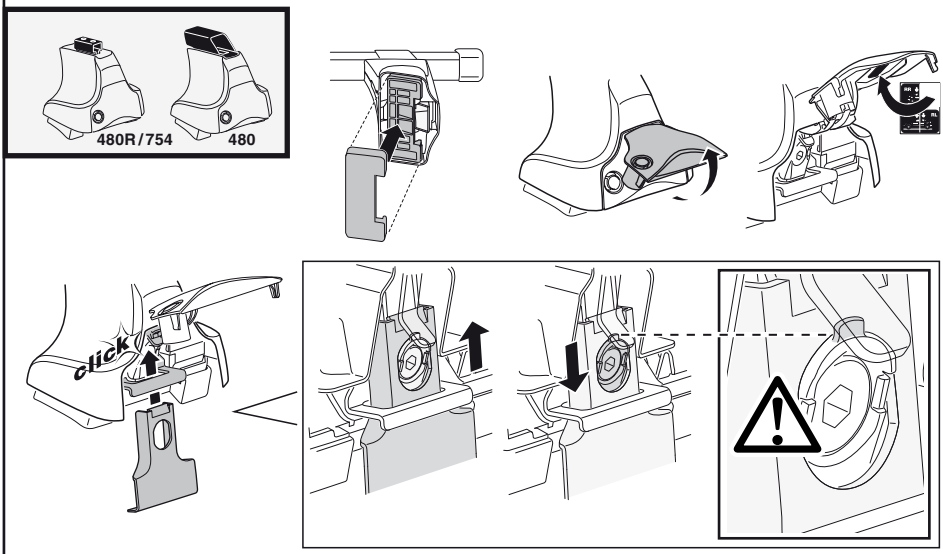

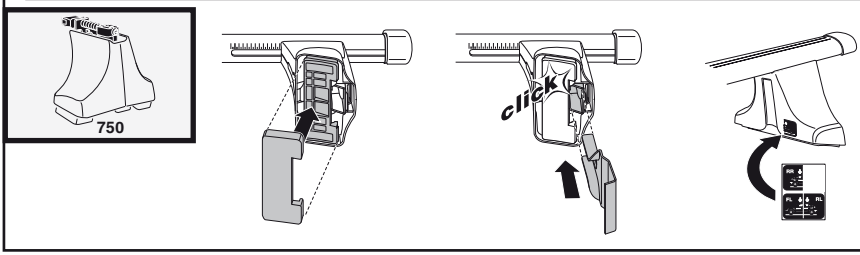

5

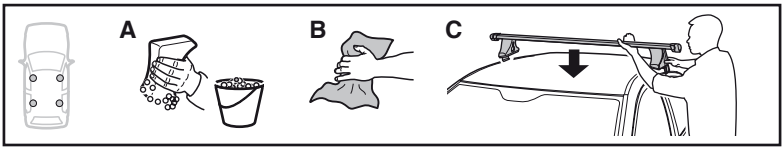

	X mm	Y mm	X inch	Y inch
HONDA HR-V, 3-dr SUV, 99-01, 02-05	**400** mm	**700** mm	**15 3/4 ”**	**27 1/2 ”**
HONDA HR-V, 5-dr SUV, 00-01, 02-05	**400** mm	**700** mm	**15 3/4 ”**	**27 1/2 ”**

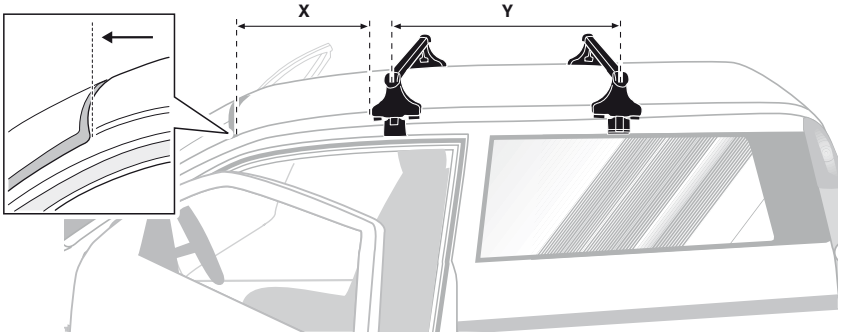

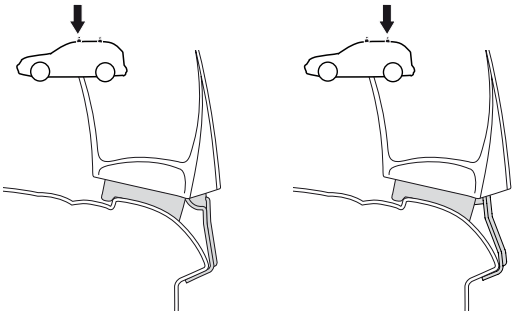

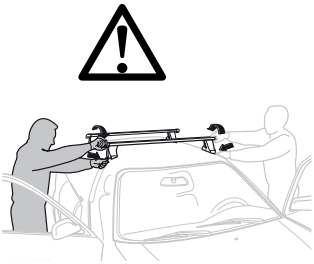

GB/US	Tighten alternately
D	Die Schrauben abwechselnd anziehen
F	Serrer alternativement chaque côté
NL	Afwisselend aan de linker- en de rechterkant aandraaien
I	Alternare il serraggio delle viti
E	Apretar alternativamente
PT	Aperte alternadamente
S	Dra åt växelvis
FIN	Kierrä vuorotellen
EST	Pinguldage vaheldumisi
LAT	Pievelciet pamīšus
LIT	Užsukinėkite pakaitomis
PL	Śruby dokręcaj naprzemiennie
RU	Затягивайте попеременно
CZ	Pokrętła bagażnika dokręcaj dokręcaj naprzemiennie.
SK	Doťahujte striedavo
SLO	Privijajte izmenično.
HR	Naizmjenično zategnite
HU	Egymástól függetlenül szorítandó
GR	Σφίγγετε εναλάξ
TR	Dönüşümlü sıkın
中文	交替拧紧
한국어	번갈아 가며 조이십시오.
日本語	交互に締め付けてください。
ไทย	ขันในแบบสลับ

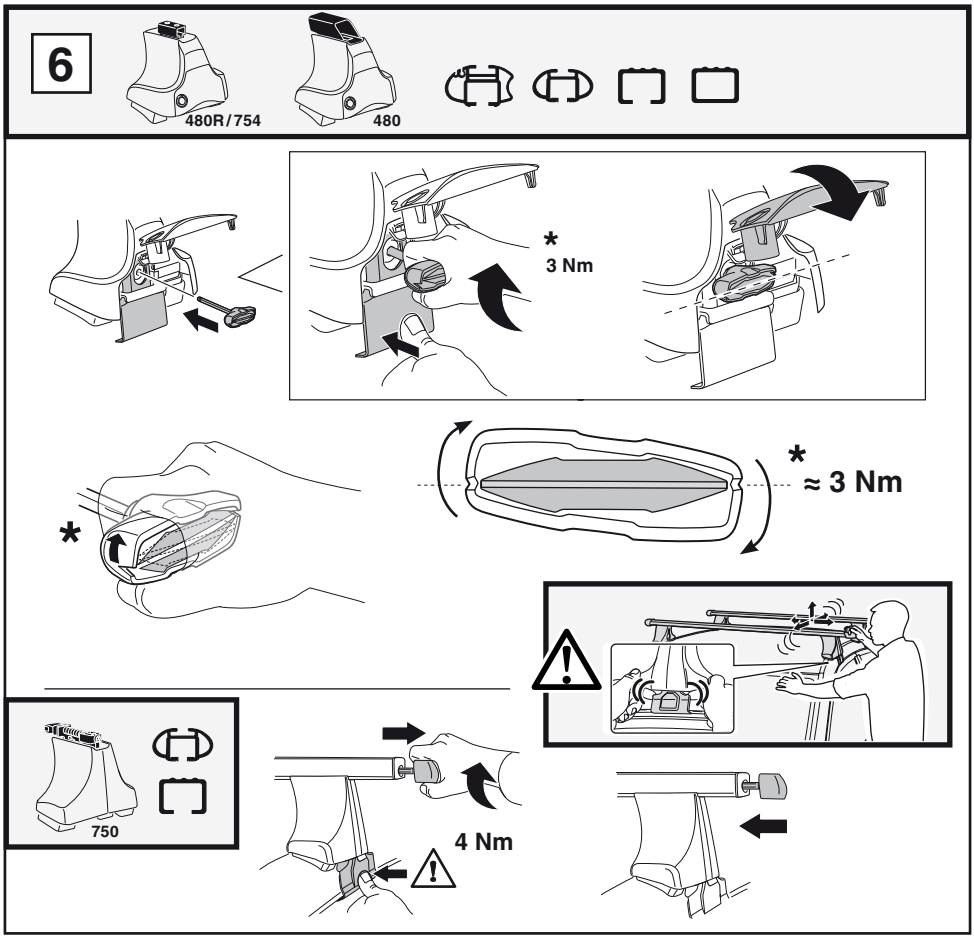
6
480R/754
480
*
3 Nm
*
*
≈ 3 Nm
750
4 Nm

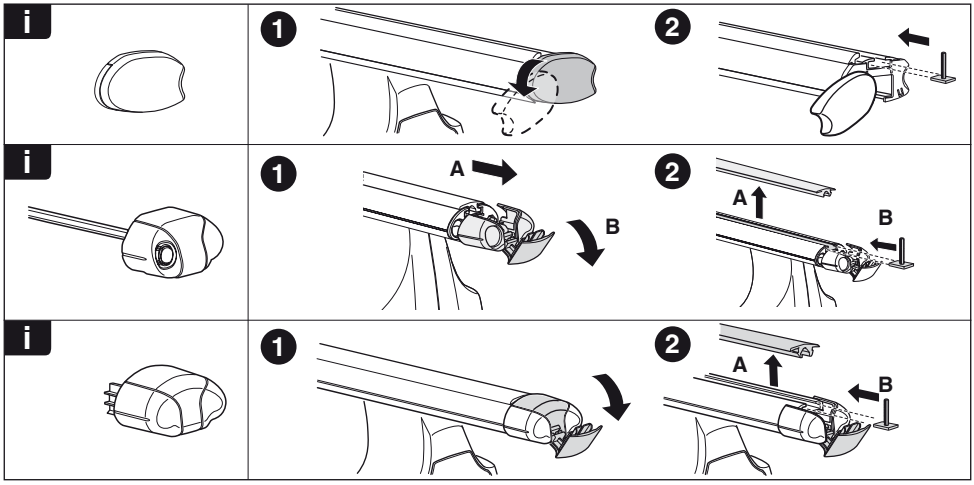
i
1
2
i
1
A
B
2
A
B
i
1
2
A
B

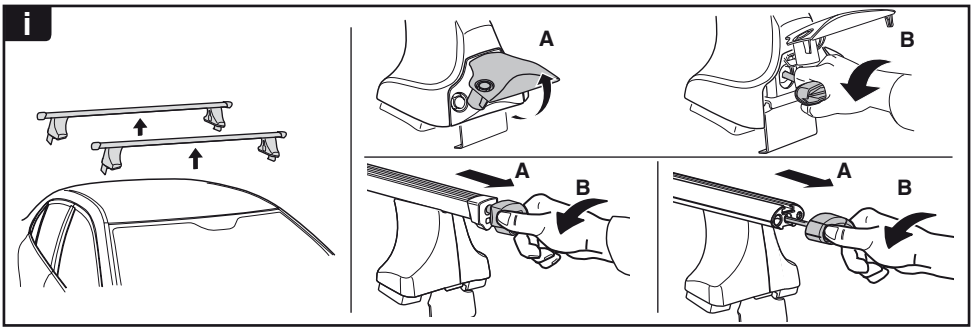

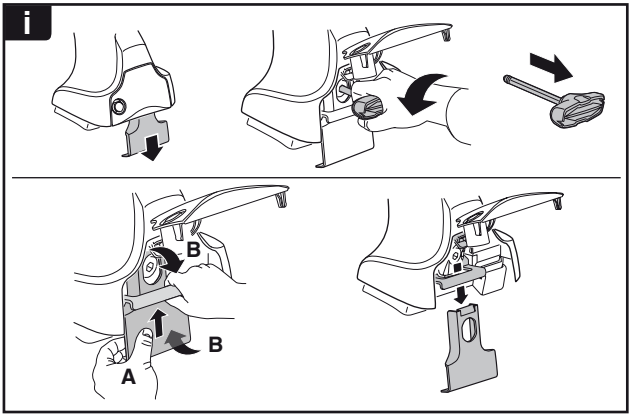

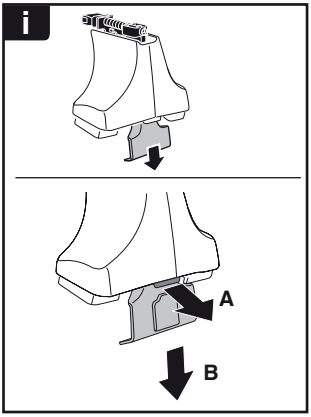

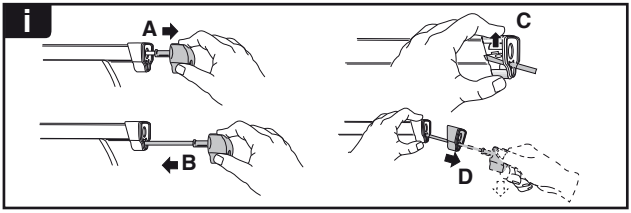

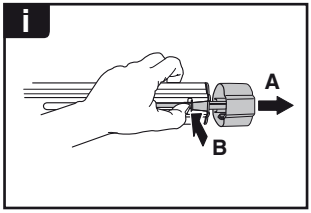

THULE SWEDEN

ONE KEY SYSTEM

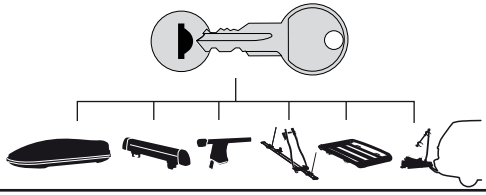

	544	(x4)
	596	(x6)
	588	(x8)
NA	510	(x10)
EUR ASIA	452	(x12)

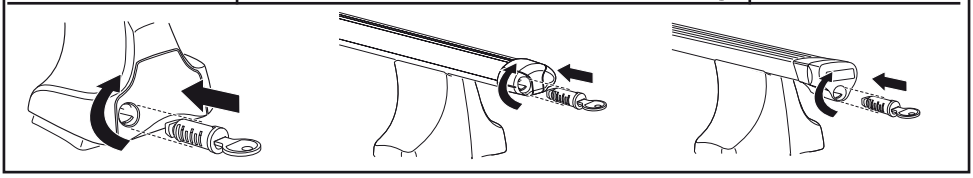

WW Thule Sweden AB, Box 69, 330 33 Hillerstorp, SWEDEN
NA Thule Inc., 42 Silvermine Road, Seymour, Connecticut 06483, USA
info@thule.com
customer.service@thule.com
www.thule.com