BUZZ RACK

BUFFALO 4

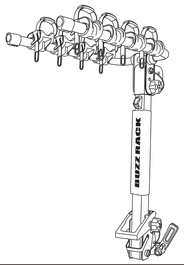

Max		
50 kg	9.8 kg	40.2 kg
55 kg		45.2 kg
60 kg		50.2 kg
65 kg		55.2 kg
>70 kg		MAX 60 kg

>65mm / ISO 50mm / 9.8 kg 21.6 lbs / 4 MAX 4x15 kg MAX 4x33 lbs

Made in Taiwan

94-3900-144-10-V3/20231127

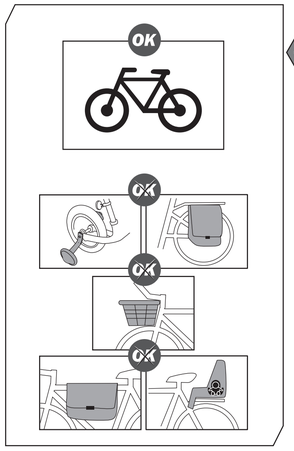

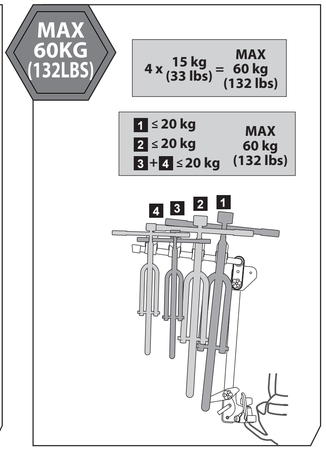

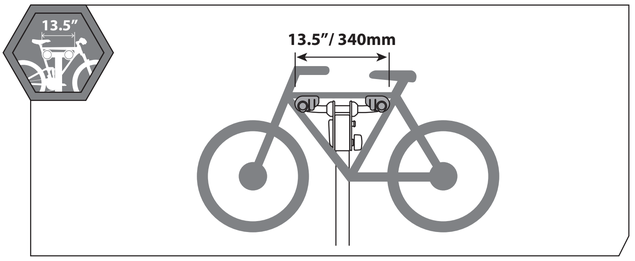

ACCESSORIES (NOT INCLUDED)

BUZZGRIP

47-0100-021-10

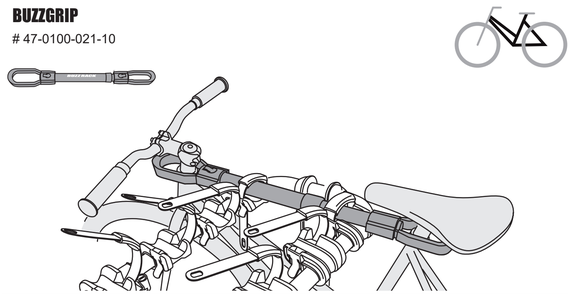

BUZZLIGHT

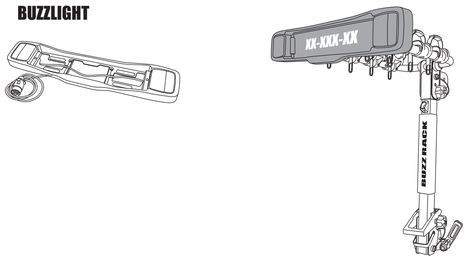

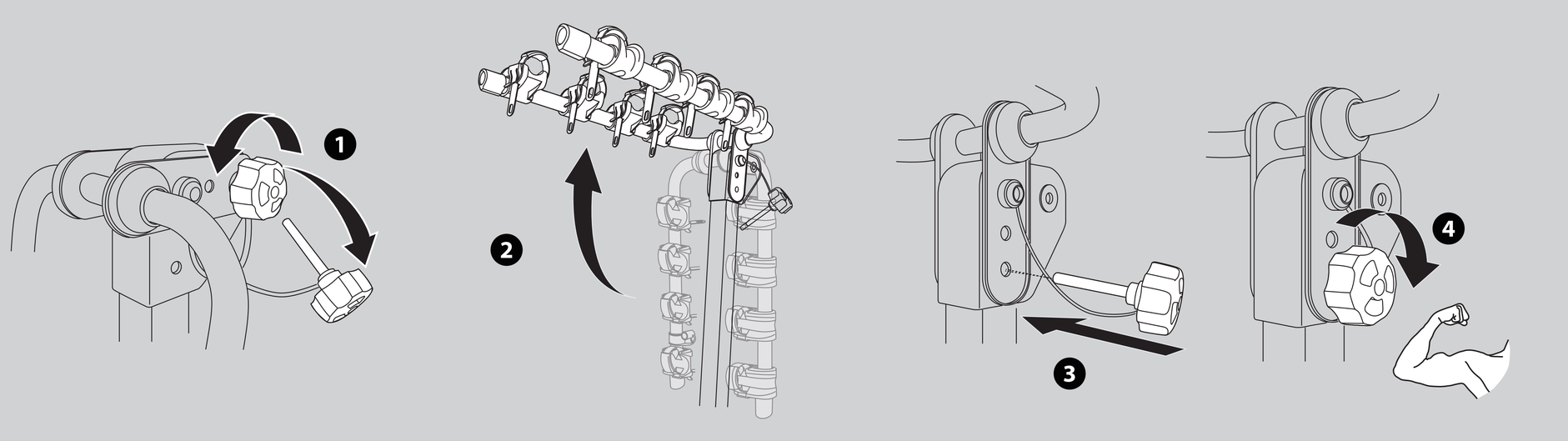

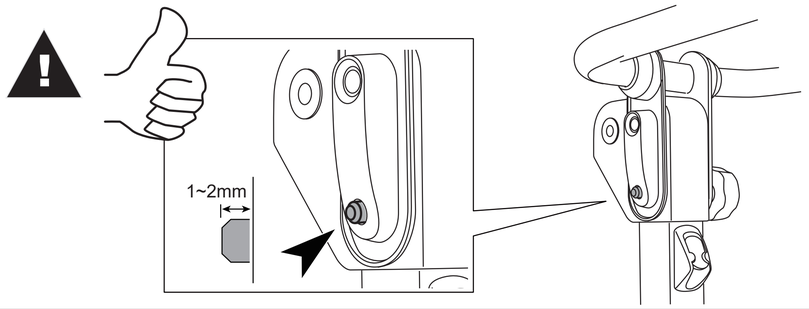

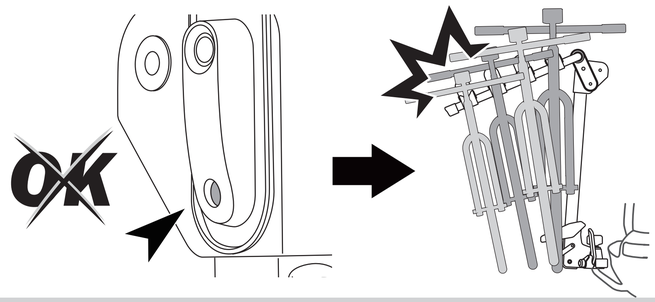

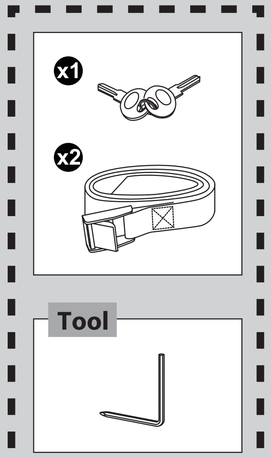

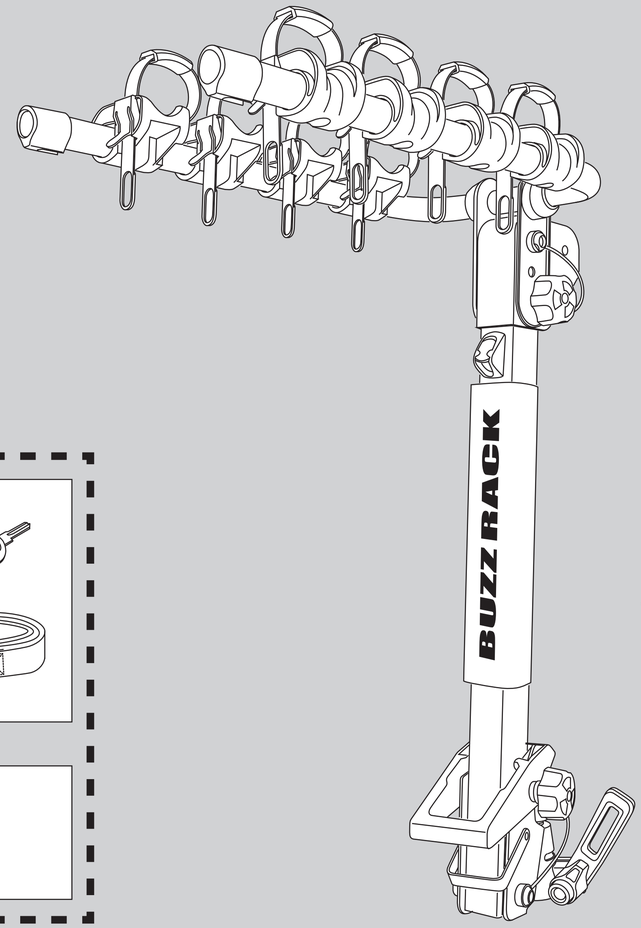

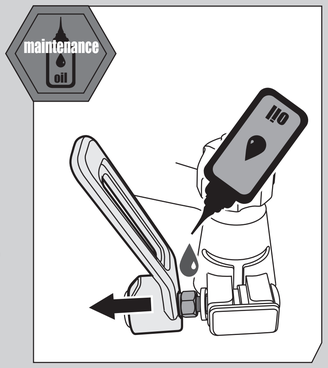

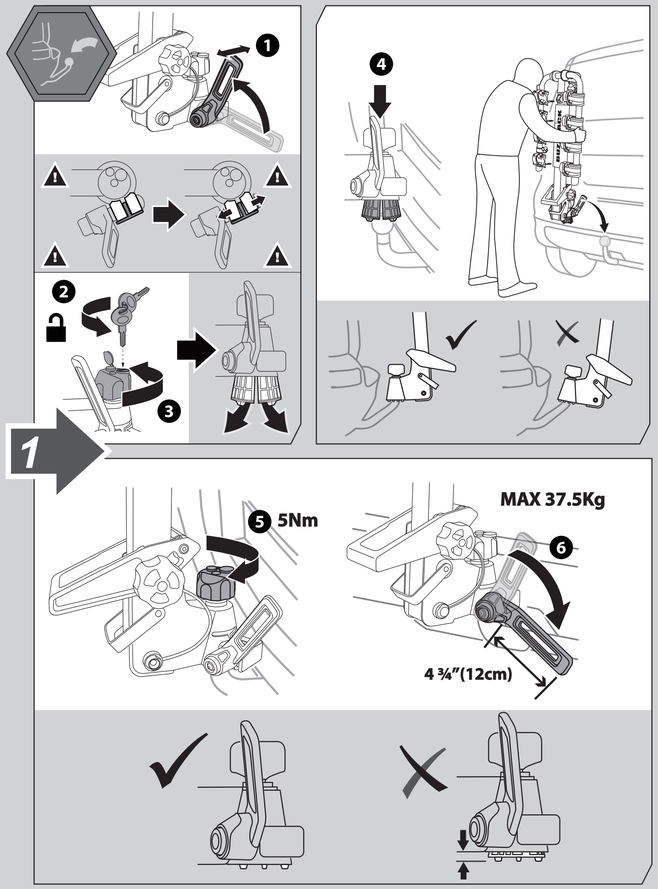

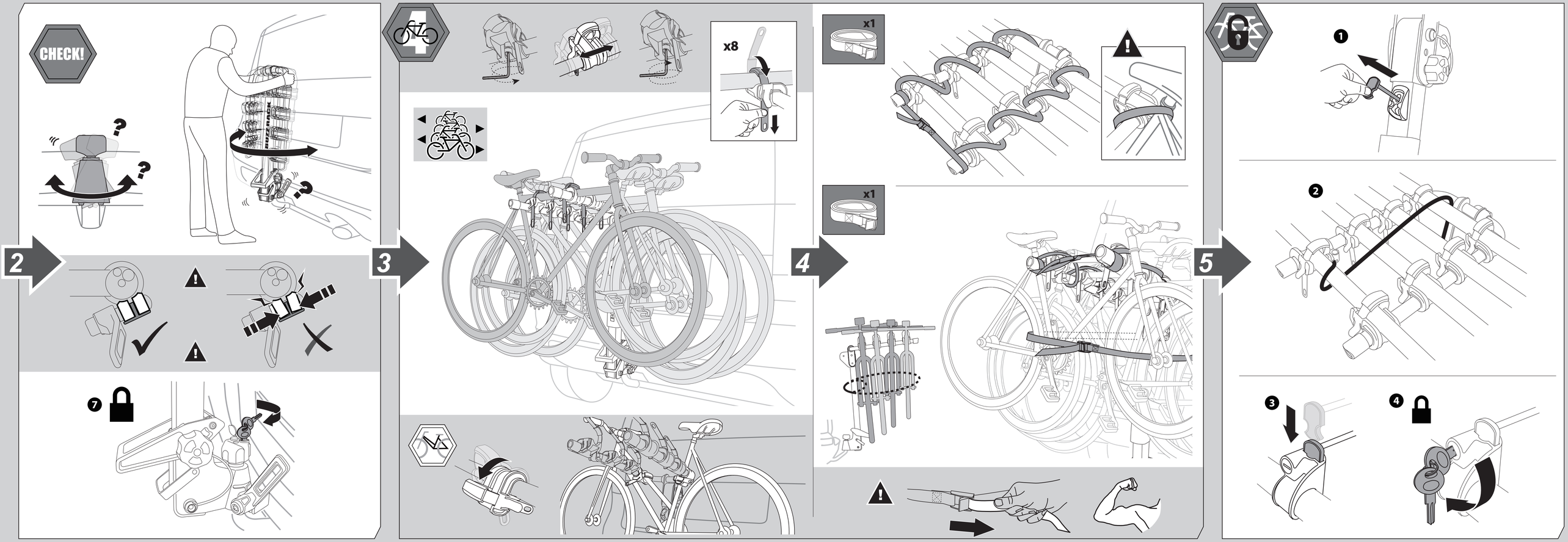

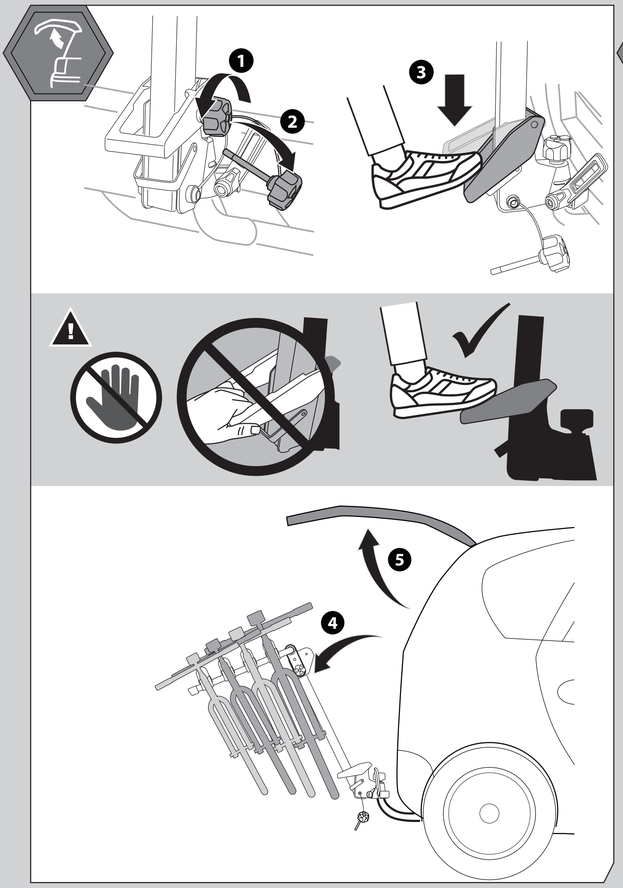

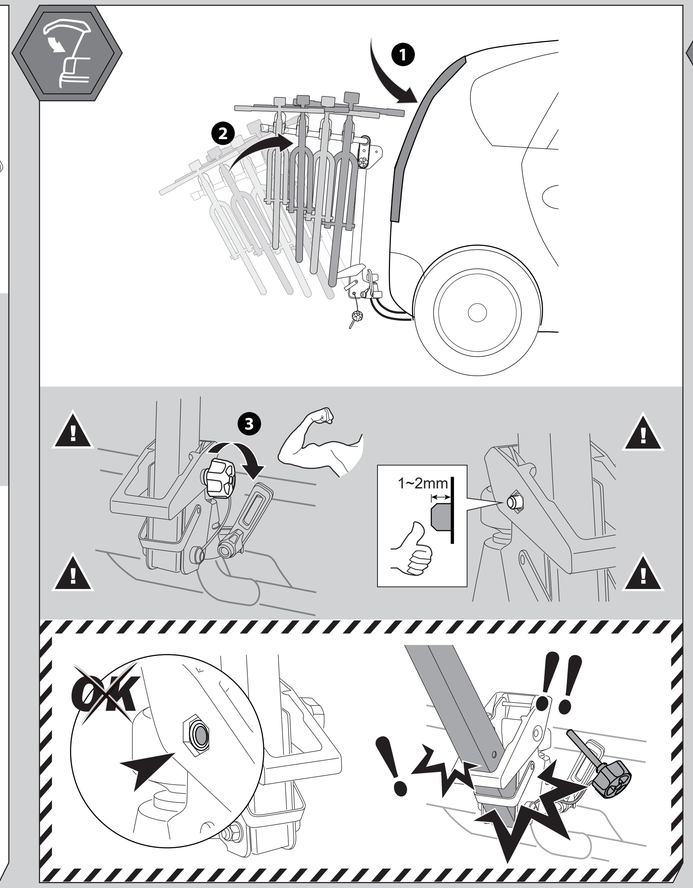

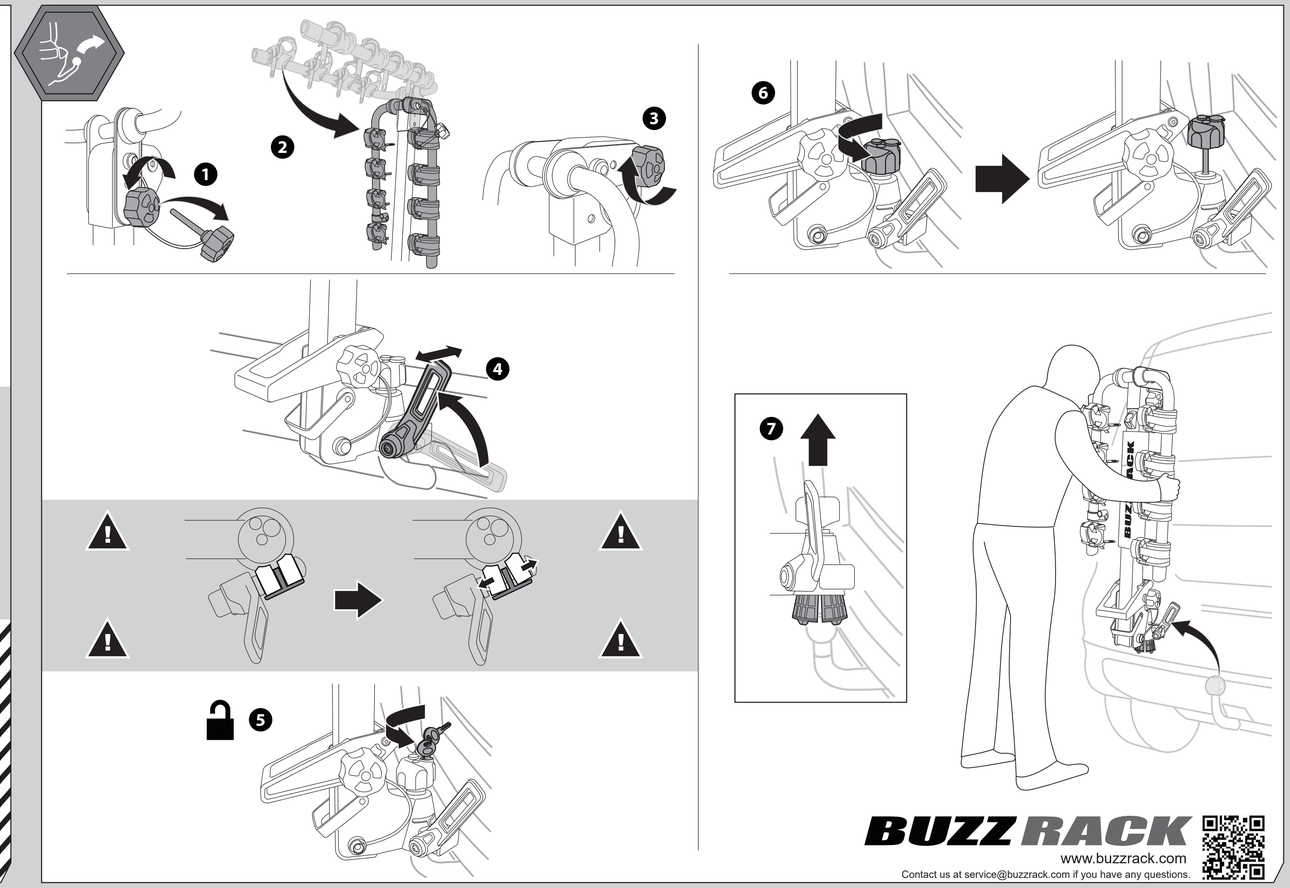

BUZZ RACK

www.buzzrack.com

Contact us at service@buzzrack.com if you have any questions.