THE ROOF BOX COMPANY

Expert Advice

YAKIMA

FrontLoader YK8002104

Technical specifications

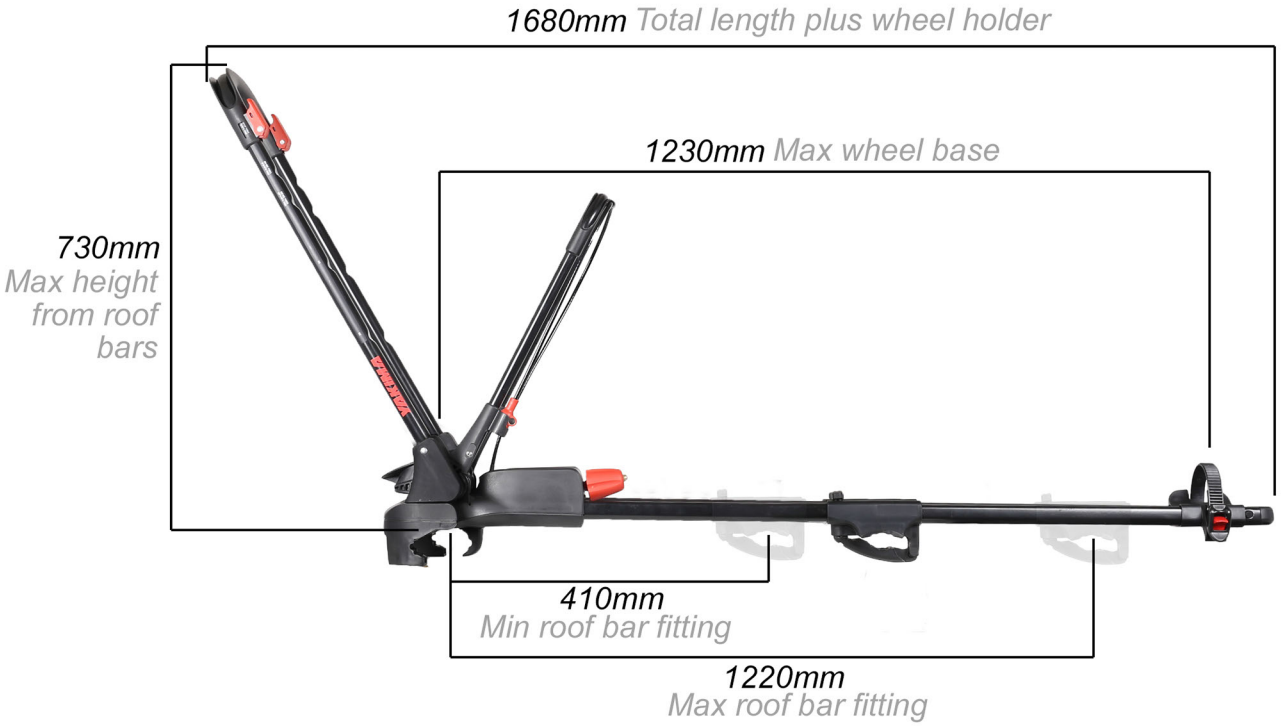

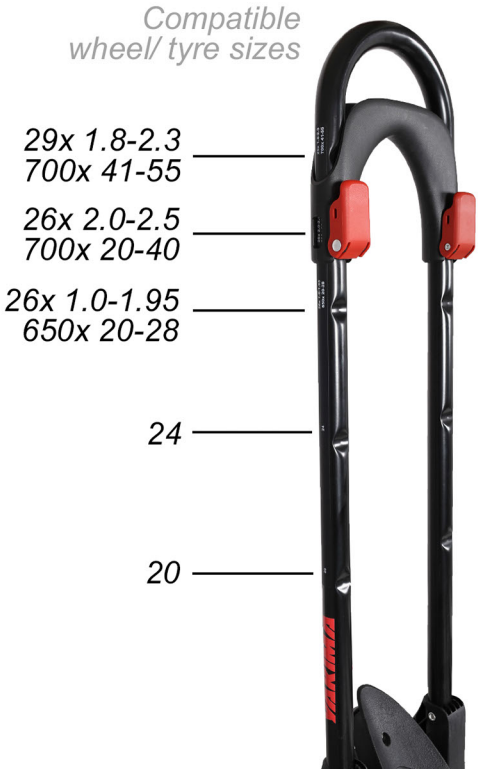

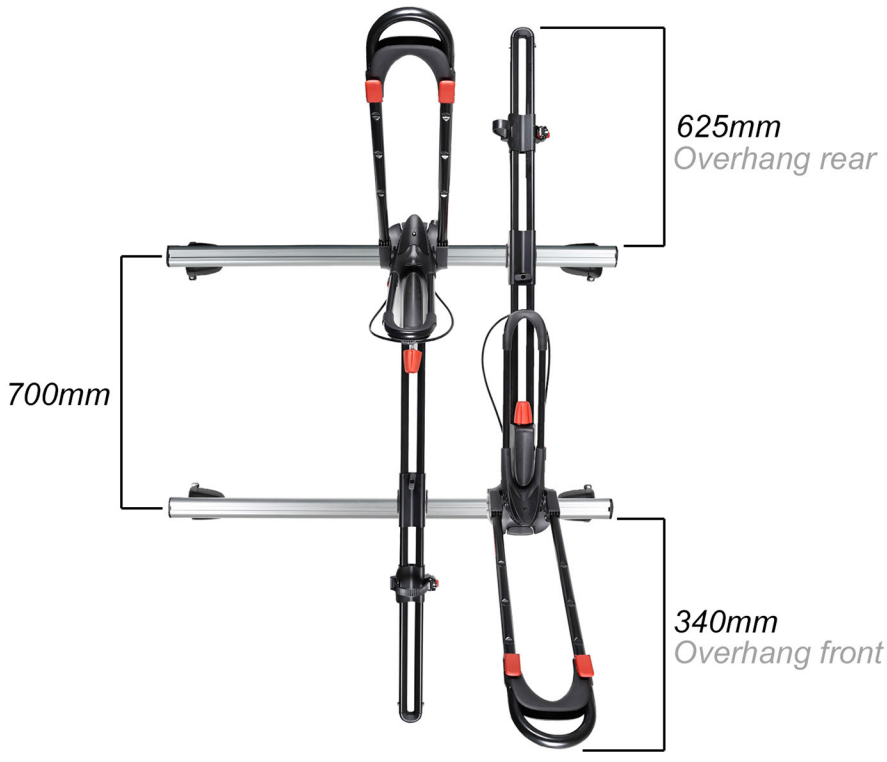

FrontLoader YK8002104
Technical specifications

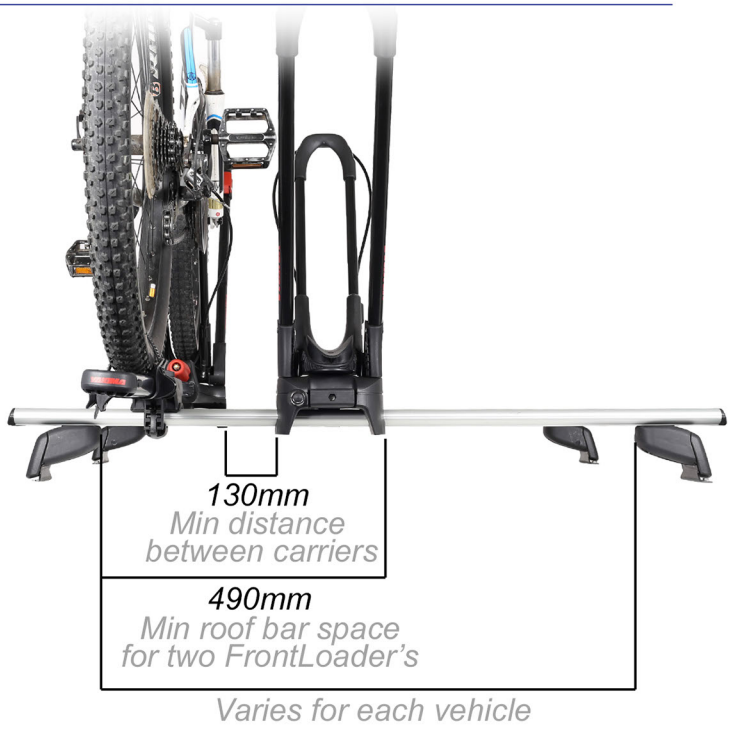

Make - *Yakima*
Model - *FrontLoader YK8002104*
Mount - *Roof mount*
Type - *Wheel holder*
Colour / finish - *Black*
Weight - *6kg*
Max bike weight - *18kg*
Max number of bikes per carrier - *1*
Max wheelbase - *1230mm*
Min wheelbase - *Depends on frame size*
Bike to carrier lock - *Yes*
Carrier to vehicle lock - *Yes*
Fits bars between - *W 88mm x D 16-44mm*
Compatible downtube dimensions - *N/A*
T-track - *No*
Fits steel bars - *Yes*
Length of wheel straps - *240mm*
Available accessories - *Long wheel strap YK8880229*
Length of guarantee - *2 years*
Not suitable for - *E-bikes, bikes with mudguards close to the tyre.*
Important information - *Top and tail when fitting to use less space. - If mounting to roof bars that are 410-460mm apart, max bike weight is reduced to 13.6kg and no more than 2 bikes to be fitted.*

This leaflet has been produced by John Jordan Limited and is intended to supplement the manufacturer's instructions supplied. Please always follow the manufacturer's instructions. This advice is offered on the understanding that John Jordan Limited will not accept responsibility for any errors or omissions, or for any damage or injury incurred by choosing to follow any additional advice contained in this leaflet. Please always follow the manufacturer's instructions!
© These pictures and words are the copyright of John Jordan Limited trading as The Roof Box Company, all rights reserved.

help@roofbox.co.uk
01539 621884